The EkoMax Series

SCALE SHELF, SANDWICH AND BAGEL INSERT

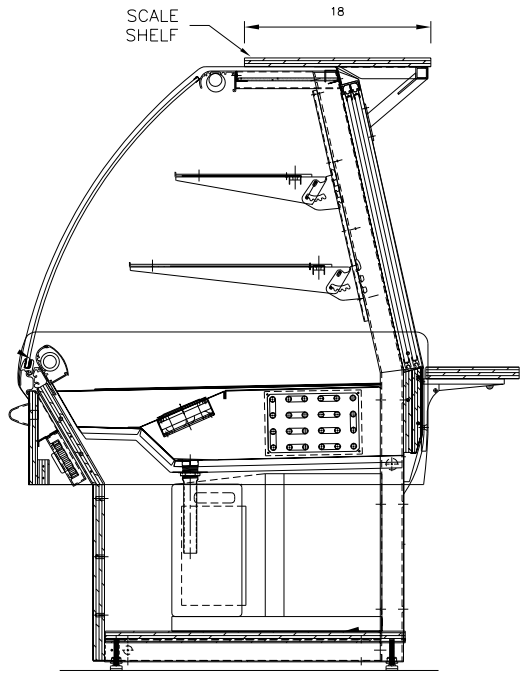

SECTION/ SCALE SHELF

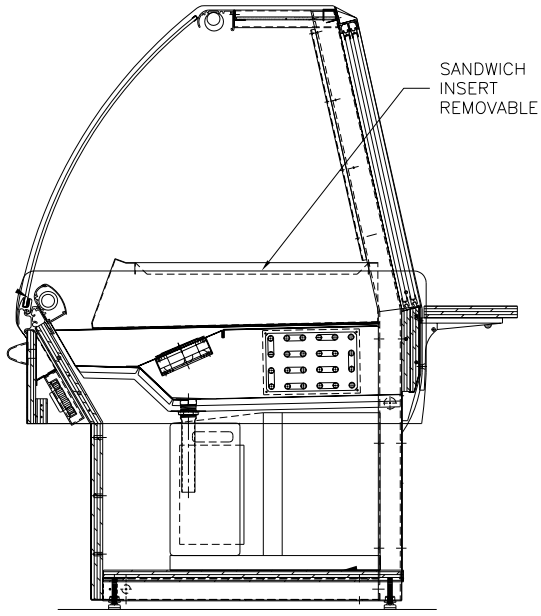

SECTION/ SANDWICH INSERT

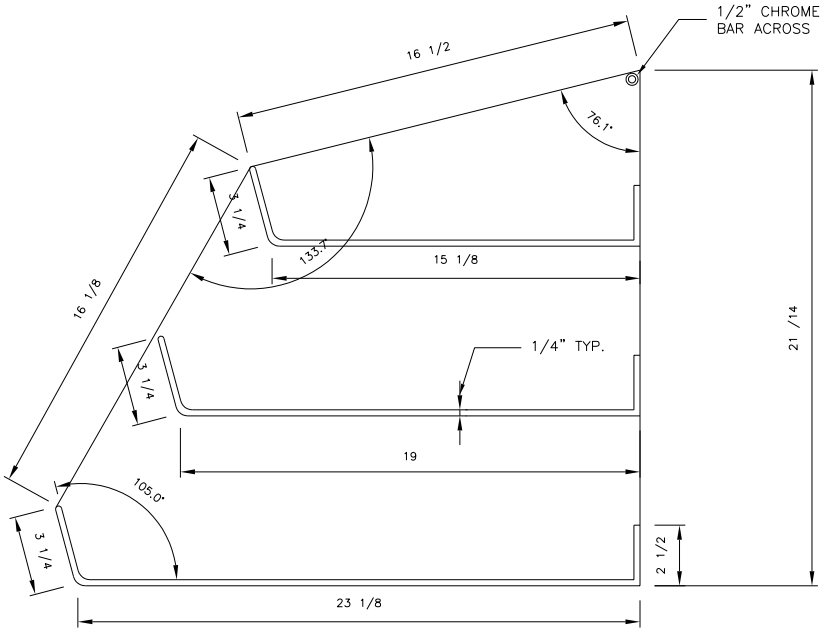

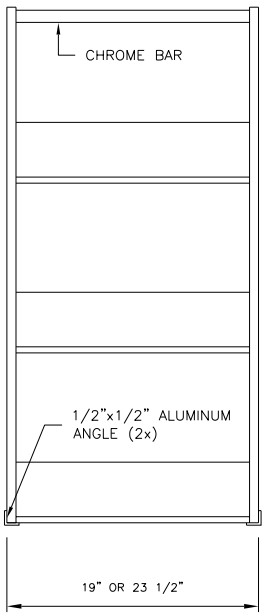

BAGEL INSERT

C:\Documents and Settings\All Users\Documents\cat2003\EKOMAX\dwg\40-SCALE SHELF, SANDWICH, BAGEL.dwg,
7/15/2003 1:10:42 PM, Jayne Hurley